EWS370AP

EWS371AP

Dual Band AC2600

Outdoor Long Range Wireless Access Point

The edge 802.11ac built-in high performance Access Point with MU-MIMO technology for high-density use on multiple applications.

EnGenius Wireless Management Access Point solution is designed for deploying on the versatile indoor and outdoor application. To meet today's requirement on varied networking environment, EnGenius would like to provide the solution as flexible, robust and effective as the organization they desire.

The state-of-the-art 802.11ac and MU-MIMO technology brings revolutionary connecting speed and bandwidth for diversity of multimedia applications. EWS370AP and EWS371AP equips with two powerful RF interfaces that support up to 1,733 Mbps in 5GHz frequency band and 800 Mbps in 2.4GHz frequency band (with 4ss/VHT40 clients).



Features

- Dual radio 4x4 802.11 ac/a/b/g/n Access Point with multi-user MIMO (MU-MIMO)
- Support up to 1,733 Mbps in 5GHz frequency band and 800 Mbps in 2.4GHz frequency band (with 4ss/VHT40 clients).
- Support 802.11ac Wave 2.0 technology to enhance overall bandwidth and speed to wireless client devices.
- 360° omni-directional antennas to achieve comprehensive coverage for networking client devices under a pervasive environment.
- Compliance with 802.3at/Proprietary 48V-54V PoE Input for flexible installation over 100 meters (328 feet)
- Superior redundant Ethernet interface to assure the non-interruption powering over the 2nd Ethernet port when the 1st Ethernet port is damaged.
- Systemic and distributed management over EnGenius ezMaster and EWS Management switch without licensing or subscription fee.
- Perform one-click update to deliver a configuration over multi-segments for managed Access Points.
- Choose an operating mode to meet your management and deployment requirement.

Wireless Management solution is ideal for deployment in these venues:

- Airport Terminals
- Warehouse Operations
- College Campuses
- Corporate Campuses
- Rail Station
- Shopping Malls
- Resort Properties
- Parks & Campgrounds
- Stadiums & Arena
- Medical Centers
- Luxury Homes & Estates

Provide Consistent Performance

Designed by EnGenius could provide the powerful RF interfaces to assure the reliability of signal strength and sensitivity in a pervasive environment. The optimist interfaces will provide the evenly coverage to assist users to reduce dead spots in their WLAN and boost received signal quality to deliver the best 2.5Gbps air performance to wireless client devices.

Carry multimedia content over MU-MIMO Transmit Beam-forming technology.

Be a prior AC2600 solution, EWS370AP and EWS371AP are not only built in powerful RF interfaces, but it also features advanced Multi-Users Multiple input Multiple output (MU-MIMO) and Transmit beamforming (TxBF) technologies.

The significant improvement on 802.11ac wave 2.0 is MU-MIMO technology, which enhances a dramatic break-through in the performance and flexible transmission to wireless client devices. MU-MIMO allows multiple spatial streams to be allocated to different clients simultaneously, increasing totally throughput, reduce latency, capacity of the WLAN system and increase spectral efficiency.

Beamforming is a standard in 802.11ac wave 2.0 which allows Access Points to focus energy of multiple antennas to transmit to a particular client device in that direction of that client. The innovative technology significantly enhances the higher signal-to-noise ratio and greater throughput of that client .

With MU-MIMO and Beamforming technology, EWS AC2600 advanced Managed Access Points could bring more traffic to wireless client devices simultaneous over the longer distance and save time for serving other wireless client devices.



MU-MIMO

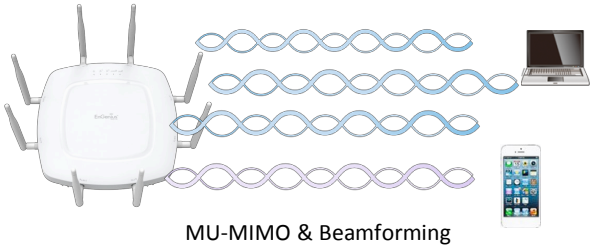

MU-MIMO & Beamforming

Exquisite RF Management to Achieve Optimal Wireless Performance

EnGenius intelligent RF detecting mechanism—**Background Scanning**, continues to monitor RF movement of an environment and initialize the control of **Transmit Power** and **channel assignment** assuring the evenly RF coverage and consistent wireless performance. To assist client devices to get the optimal performance under a pervasive environment, **Band Steering** automatically steers dual-band capable client devices to the appropriate channel, while prefer 5GHz or band balancing works to maintain a balanced number of clients per Access Point. Configuring multiple Access Points to serve your own devices (BYOD) in enterprise class wireless LAN environment can enable **Fast Roaming** to reduce roaming delay time and to secure seamless connection on VOIP service when mobile devices move between Access Points.

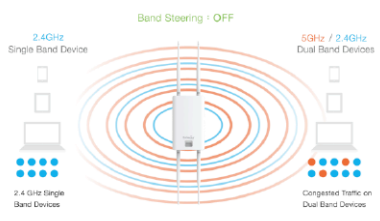

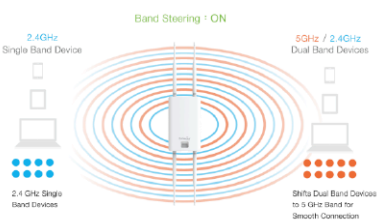

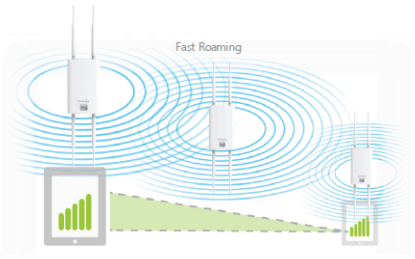

Securable Portals for different purpose

EnGenius provides **Captive Portal** to differentiate the authority of users on using Internet access. Considering the value added function, administrators offer a securable service to serve client devices including to encrypt over database of an authentication server, customized-branded splash of webpage, simplified logon service, and promoting content and using polices. Administrators can also use **Virtual LAN (VLAN)** with **Guest Network** to isolate each client for avoiding an unnecessary touch, leaking sensitive data, and enhancing Internet security and reliability.

Restrain Wireless Traffic under a Pervasive Environment

To effective manage the usage of each client devices at a LAN topology, **Traffic Shaping** controls the bottle of bandwidth to offer the limited bandwidth for an individual **SSID** or **each client** per Access Point. This constraint offers the constant bandwidth to perform specific applications like VOIP and video streaming fluently and smoothly without air congestion on each client devices.

Comprehensive Network Protection

With EWS Access Points, your network is protected from attacks at multiple level through advanced wireless encryption standards such as Wi-Fi Protected Access (WPA and WPA2) which uses a temporal key integrity protocol (TKIP) and authentication database, IEEE 802.1X with Radius server. EnGenius also offers the advanced encryption standard (AES) to encrypt traffic between Access Points and client devices. EnGenius wireless management system offers advanced mechanism to detect and to prohibit threats over **Rogue AP detection**. Once threats or event are detected, built-in **E-mail Alerts** systems will automatically deliver an e-mail notification for administrators to trigger immediate actions on these networks threats.

Simplified Management and Configuration over ezMaster or EWS Management Switch

EWS-series managed Access Point is designed to work with EWS-series Wireless Management Switch and ezMaster management platform for scalable and flexible wireless management application.

Whether you want to manage a few or 1000+ Access Points and switches on network in different locations with different segment —or 10 to 10,000 concurrent users, the **EnGenius ezMaster platform** makes these management and configuration simplified and intuitively over centralizing bulk configuration, provision and monitoring which is the lower operating and maintenance cost from a local or remote server—or in the cloud.

With the small scope or maximum 50pcs managed requirement, **EWS management switch** can perform auto discovery to search EWS managed Access Points. WLAN administrator can easily use individual or cluster settings to fast deploy numbers of AP with desired settings, saving repetitive configuration tasks.

Via SmartSync Redundancy, if the connection to your ezMaster platform is lost, EWS management switch will automatically store syslog and statistics from the APs. Then, when the connection is re-established, all information will be re-synchronized and sent to ezMaster Management platform. Administrators will not miss any statistics and reports.

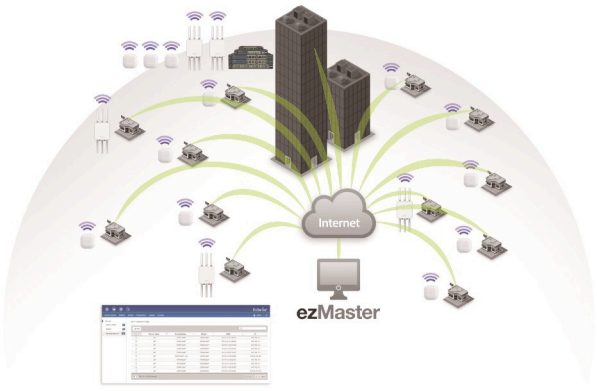

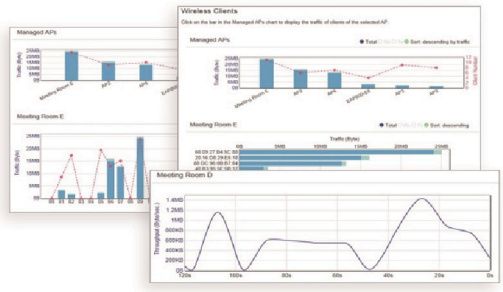

Technical Specifications Wireless Managed Indoor Access Point

Wireless Radio Specification

Access Point Type:
Indoor, dual radios concurrent, 5GHz 802.11 ac 4x4 MIMO is backwards compatible with 802.11 a/n mode, 2.4GHz 802.11 n 4x4 MIMO is backwards compatible with 802.11 b/g.

SU-MIMO:
Four(4) spatial stream SU-MIMO for up to 1,733 Mbps wireless data rate to a single wireless client device.

MU-MIMO
Three(3) spatial stream MU-MIMO for up to 1,300 Mbps wireless data rate to transmit to three(3) MU-MIMO capable wireless client devices simultaneously.

Frequency Radio
2.4GHz: 2400MHz ~ 2835MHz,
5GHz: 5150MHz~5250MHz, 5250MHz~5350MHz, 5470~5725MHz, 5725MHz~5850MHz
Support radios and channels will be varied on the configured regulatory domain.

Supported Radio Technology
802.11b: Direct-sequence spread-spectrum (DSSS)
802.11ac/a/g/n: Orthogonal frequency-division multiplexing (OFDM)
802.11n/ac: 4x4 MIMO with 4 streams
802.11ac supports very high throughput (VHT) — VHT 20/40/80 MHz
802.11n supports high throughput (HT) — HT 20/40 MHz
802.11n supports very high throughput under the 2.4GHz radio –VHT40 MHz (256-QAM)
802.11n/ac packet aggregation: A-MPDU, A-SPDU

Supported Modulation Type
802.11b: BPSK, QPSK, CCK
802.11a/g/n: BPSK, QPSK, 16-QAM, 64-QAM
802.11ac: BPSK, QPSK, 16-QAM, 64-QAM, 256-QAM

Transmit Power (Maximum Value)
2.4GHz: 15dBm
5GHz: 15dBm
Maximum power is limited by regulatory domain

Tx Beamforming (TxBF)
Increasing signal reliability and transmitting distance.

Supported data rates (Mbps)
802.11b: 1, 2, 5.5, 11
802.11a/g: 6, 9, 12, 18, 36, 48, 54
802.11n: 6.5 to 600 (MCS0 to MCS23)
802.11ac: 6.5 to 1,733 (MCS0 to MCS9, NSS=1 to 4)

Power

Maximum Power Consumption
21W

Power Source
Direct DC Input: 12V/2A
Power Over Ethernet: 802.3at Input

Redundant over 2nd LAN Port
Take over to supply power when the 1st port is down or damaged.

Antenna

EWS370AP: (Integrated Antenna)
2.4GHz: 3.0dBi
5GHz: 3.0dBI
EWS371AP: (External Antenna)
2.4GHz: Four detachable 3.0dBi RP-SMA antennas
5GHz: Four detachable 3.0dBi RP-SMA antennas

Interfaces

Networking Interface
Two (2) 10/100/1000 BASE-T RJ-45 Ethernet Ports
Link Aggregation achieves 2Gbps Throughput

DC Powering Interface
One (1) DC Jack interface

LED Indicators
Display system and wireless transmission status

Reset Button
Convert Access Point to the Factory default or the Users Default

Mounting

Ceiling Mounting
Assemble a mounting bracket to attach into T-rail for drop ceiling

Wall Mounting
Mount Access Point on a flat wall

Mechanical & Environment

Dimensions
21.5 x 21.5 x 5.6 cm (8.46" x 8.46" x 2.2")

Weight
1.7 Kg (3.7 lbs)

Operating:
Temperature: 0°C~50°C (32°F~122°F)
Humidity: 0% ~ 90% typical

Storage:
Temperature: -30°C~80°C (-22°F~176°F)
Humidity: 0% ~ 90% typical

Compliance Regulatory

FCC Subpart15 B
Subpart C 15.247
Subpart E 15.407

CE
EN 300 328
EN 301 893
EN 50385

EN 60601-1-1
EN 60601-1-2
EN 55022
EN 55024

R&TTE Directive 1995/5/EC

Low Voltage Directive 72/23/EEC

Technical Specifications Wireless Managed Indoor Access Point

Operating Mode

Managed Mode
Cluster setting and centralized management over ezMaster or EWS management switch

Stand Alone Mode
Independent services wireless client devices.

Exquisite RF Management

Background Scanning
Regular scanning signal level of an environment to provide parameters for performing Auto Transmit power and auto channel.

Auto Transmit Power
Automatically adjust power level when EWS access points work at an environment.

Auto Channel
Automatically assign a clearly channel to perform RF transmission under a pervasive environment.

Fast Roaming (802.11k)
Collect the parameters of neighborhood Access Points to find the optimal AP.

Band Steering
Steer client devices to a proper frequency band for getting more bandwidth and speed under an Access Point.

RSSI Threshold
Kick the client which the signal (RSSI) is above the set value from the AP for reducing the interference and optimize the connecting quality.

Optimize Performance

Quality of Service
Compliance with IEEE 802.11e standard

Prioritizes voice over data for both tagged and untagged traffic
Transmit video, voice and data at the same SSID

Power Save Mode
Support U-APSD

Pre-Authentication
Compliance with 802.11i &11x

PMK Caching
Compliance with 802.11i
If wireless client devices has authenticated to an access point, it does not perform a full authentication exchange when client devices roaming between access points.

Fast Roaming (802.11r)
Use a Fast Transition key to handover between Access Points

Multicast to Unicast Conversion
Using the IGMP protocol, an access Point delivers high definition content to a large number of clients simultaneously.

Easy to Management

Multiple SSIDs
BSSID support
Support 8 SSIDs on both 2.4GHz and 5GHz bands

Captive Portal
Differentiate the authority of users on using Internet access

Guest Network
Isolate each client for avoiding an unnecessary touch, leaking sensitive data, and enhancing Internet security and reliability.

VLAN Tag
Independent VLAN setting can be enable or disable. Any packet that enters the Device without a VLAN tag will have a VLAN tag inserted with a PVID (Ethernet Port VID)

VLAN Per SSID
Integrate VLAN ID with a SSID interface to forward packets over the defined path

Traffic Shaping
Controls the bottle of bandwidth to offer the limited bandwidth for an individual **SSID** or **each client** per Access Point.

MAC Address Filtering
Filter up to 64 sets MAC addresses per SSID

E-Mail Alert
Provides a network monitoring tool for administrators to stay informed the configuration change.

Finger Printing
The value added solution collect information of client devices including name of devices, IP address, MAC address, Operating system version, transmitting and receiving data, and signal level.

Save Configuration as Users Default
Save the customized configuration as default value for different customer demands.

Wi-Fi Scheduler
Perform a regular reboot on access point at assigned schedule
Perform it to enable or disable 2.4GHz or 5GHz interface from a period time.

SNMP &MIB
v1/v2c/v3 support
MIB I/II, Private MIB

CLI supported

RADIUS Accounting
Help operators to offload 3G to Wi-Fi seamlessly

Wireless Clients list
Provide the list to display real status of wireless client devices on this Access Point.

Comprehensive Protection

Wireless Encryption Standard
WEP Encryption 64/128/152bit
WPA/APW2 Enterprise (WPA-EAP using TKIP or AES)

Hide SSID in beacons

Rogue AP Detection
Enable the function to detect the fake access points in the environment.

L2 Isolation
Block the communication between the associated clients to communicate with other clients from all hosts on the same subnet.

Client Isolation
Block/Isolate the communication between the associated clients under the same WLAN.

HTTPS
A secure communication protocol can be enabled to allow secure management web access over a computer network.

SSH Tunnel
A secure communication protocol can be enabled to allow secure remote shell access or command execution.

RF Performance Specification Wireless Managed Indoor Access Point

Channel	Data Rate	Transmit Power (Aggregated, dBm)	Receive Sensitivity (Aggregated, dBm)
802.11b 2.4GHz	1 Mbps	15.0	-96.0
	2 Mbps	15.0	-92.0
	5.5 Mbps	15.0	-91.0
	11 Mbps	15.0	-88.0
802.11g 2.4GHz	6 Mbps	15.0	90.0
	54 Mbps	13.0	75.0
802.11a 5GHz	6 Mbps	14.0	-90.0
	54 Mbps	13.0	-74.0
802.11n HT20 2.4GHz	MCS 0 / 8 /16 / 24	15.0	-90.0
	MCS 7 /15 / 23 /31	13.0	-71.0
802.11n HT40 2.4GHz	MCS 0 / 8 / 16 / 24	15.0	-88.0
	MCS 7 /15 / 23 / 31	12.0	-69.0
802.11n HT20 5GHz	MCS 0 / 8 / 16 / 24	14.0	-90.0
	MCS 7 /15 / 23 / 31	12.0	-70.0
802.11n HT40 5GHz	MCS 0 / 8 / 16 / 24	12.0	-87.0
	MCS 7 /15 / 23 / 31	12.0	-67.0
802.11ac VHT20 5GHz	MCS0	13.0	-90.0
	MCS9	11.0	-65.0
802.11ac VHT40 5GHz	MCS0	13.0	-87.0
	MCS9	11.0	-60.0
802.11ac VHT80 5GHz	MCS0	14.0	-82.0
	MCS9	11.0	-57.0

* Maximum RF performance of the hardware provided. Maximum transmit power is limited by local regulatory
* The supported frequency bands are restricted by local regulatory requirements
* Transmit power is configured in 1.0dBm increments

EWS370AP

2.4GHz H-Plane

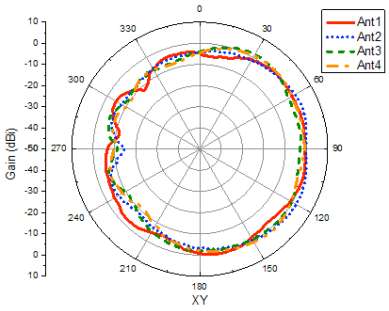

2.4GHz E-Plane

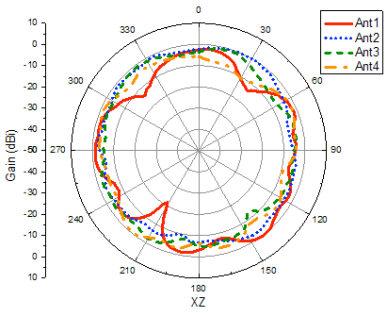

5GHz H-Plane

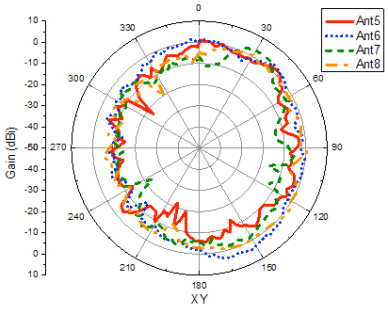

5GHz E-Plane

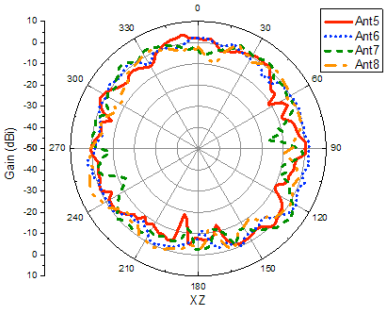

EWS371AP

2.4GHz H-Plane

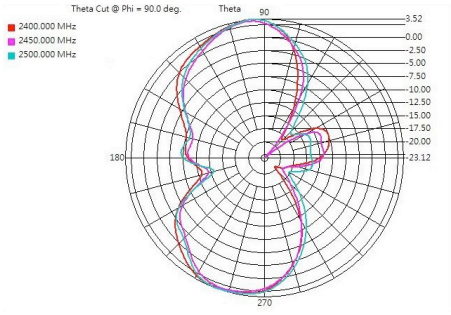

2.4GHz E-Plane

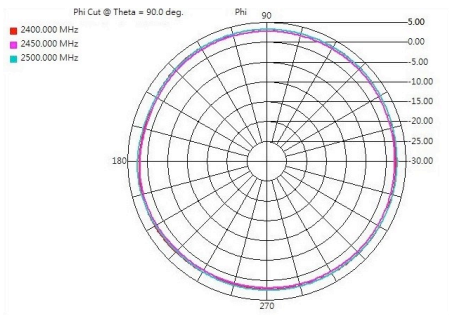

5GHz H-Plane

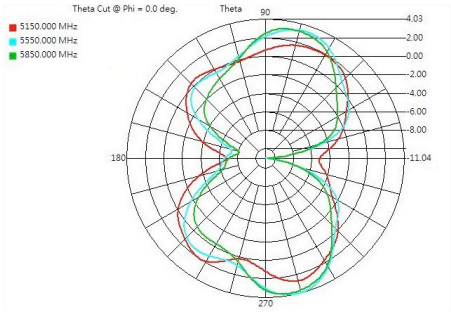

5GHz E-Plane

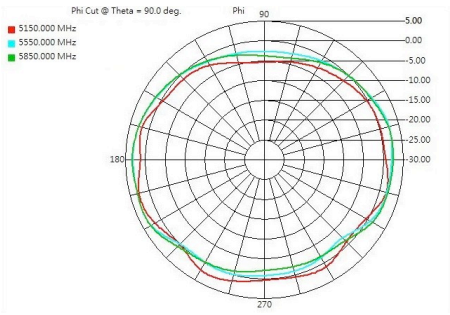

Physical Interfaces



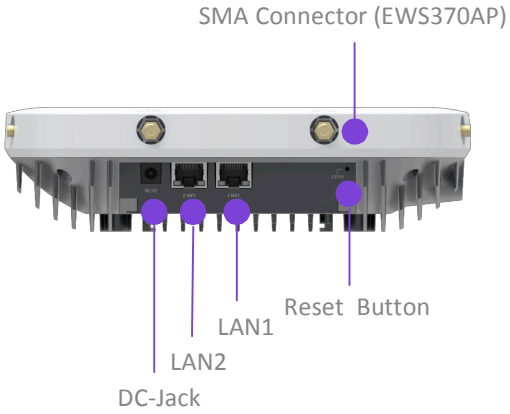

	EWS370AP	EWS371AP
		
Standards	802.11ac/a/b/g/n	802.11ac/a/b/g/n
Frequency	2.4GHz+5GHz	2.4GHz+5GHz
Data Rates	800Mbps + 1733Mbps	800Mbps + 1733Mbps
Antennas	2.4GHz: 3.0dBi; 5GHz: 3.0dBi	External 3.0dBi RP-SMA
Physical Interface	2 x Gigabit LAN; 1x DC Jack	2 x Gigabit LAN; 1x DC Jack; 8 x SMA connector interface
Radio Chains/Streams	4x4: 4	4x4: 4

Solution Information EWS Wireless Managed Access Point

EWS300AP	Single-Band 11n 2x2:2 2.4GHz Ceiling-Mount Wireless Managed Indoor Access Point
EWS310AP	Dual-Band 11n 2x2:2 Ceiling-Mount Wireless Managed Indoor Access Point
EWS320AP	Dual-Band 11n 3x3:3 Ceiling-Mount Wireless Managed Indoor Access Point
EWS350AP	Dual-Band 11ac 2x2:2 Ceiling-Mount Wireless Managed Indoor Access Point
EWS360AP	Dual-Band 11ac 3x3:3 Ceiling-Mount Wireless Managed Indoor Access Point
EWS370AP	Dual-Band 11ac 4x4:4 Ceiling-Mount Wireless Managed Indoor Access Point
EWS371AP	Dual-Band 11ac 4x4:4 Ceiling-Mount Wireless Managed Indoor Access Point
EWS500AP	Single-Band 11n 2x2:2 Wall Plate Wireless Managed Indoor Access Point
EWS510AP	Dual-Band 11n 2x2:2 Wall Plate Wireless Managed Indoor Access Point
EWS650AP	Dual -Band 11ac 2x2:2 Wireless Managed Outdoor Access Point
EWS660AP	Dual -Band 11ac 3x3:3 Wireless Managed Outdoor Access Point
EWS860AP	Dual -Band 11ac 3x3:3 Wireless Ruggedized Managed Outdoor Access Point
EWS870AP	Dual -Band 11ac 4x4:4 Wireless Ruggedized Managed Outdoor Access Point
EWS871AP	Dual -Band 11ac 4x4:4 Wireless Ruggedized Managed Outdoor Access Point

Solution Information EWS Wireless Controller Switches

EWS2910AP	8-Port GigE 61W PoE WLAN Controller/Switch – Manage up to 20 Access Points
EWS2910PKIT-300	WLAN Starter Kit (1) 8-Port GigE 61W PoE WLAN Controller/Switch – Manage up to 20 Access Points (2) EWS300AP Single-Band 11n 2x2:2 2.4GHz Ceiling-Mount Wireless Access Points
EWS5912FP	8-Port Gigabit PoE+ L2 Managed Switch with 2 GbE Ports and 2 Gigabit SFP; 130w – Manage up to 50 Access Points
EWS7928P	24-Port GigE 185W PoE+ WLAN Management Controller/Switch – Manage up to 50 Access Points
EWS7928FP	24-Port GigE 370W PoE+ WLAN Management Controller/Switch – Manage up to 50 Access Points
EWS7952FP	48-Port GigE 740W PoE+ WLAN Management Controller/Switch – Manage up to 50 Access Points

Solution Information Gigabit Managed Switch

EGS7200D-10	8-Port Gigabit Managed Smart Switch with 2 Dual-Speed SFP
EGS7200-28	24-Port Gigabit Managed Smart Switch with 4 Dual-Speed SFP
EG7200-52	48-Port Gigabit Managed Smart Switch with 4 Dual-Speed SFP

Solution Information PoE Gigabit Managed Switch

EGS2108P	8-Port Gigabit Smart Switch with 4-Port PoE; 61.6w
EGS2110P	8-Port Gigabit PoE Smart Switch with 2 Gigabit SFP; 61.6w
EGS5110P	8-Port Gigabit PoE+ Smart Switch with 2 Gigabit SFP; 130w
EGS5212FP	8-Port Gigabit PoE+ L2 Managed Switch with 2 GbE Ports and 2 Gigabit SFP; 130w
EGS7228P	24-Port Gigabit PoE+ L2 Managed Switch with 4 Dual-Speed SFP; 185w
EGS7228FP	24-Port Gigabit PoE+ L2 Managed Switch with 4 Dual-Speed SFP; 370w
EGS7252FP	48-Port Gigabit PoE+ L2 Managed Switch with 4 Dual-Speed SFP; 740w

Solution Information SFP Transceiver

SFP2185-05	1000BASE-SX SFP Transceiver, 850nm, 0.5km
SFP2213-10	1000BASE-LX SFP Transceiver, 1310nm, 10km

HQ , Taiwan
www.engeniusnetworks.com

Costa Mesa, California, USA | (+1) 714 432 8668
www.engeniustech.com

Dubai, UAE | (+971) 4 357 5599

Singapore | (+65) 6227 1088
www.engeniustech.com.sg

Miami, USA | (+1) 305 887 7378
pg.engeniustech.com es.engeniustech.com

Eindhoven, Netherlands | (+31) 40 8200 888

EnGenius

Features and specifications subject to change without notice. Trademarks and registered trademarks are the property of their respective owners. These limits are designed to provide reasonable protection against harmful interference in a residential installation. This equipment generates, uses, and can radiate radio frequency energy and, if not installed and used in accordance with the instructions, may cause harmful interference to radio communications. Operation of this equipment in a residential area is likely to cause harmful interference in which case the user will be required to correct the interference at his/her own expense. Prior to installing any surveillance equipment, it is your responsibility to ensure the installation is in compliance with local, state and federal video and audio surveillance and privacy laws.

Version 1.1— 04/13/16